Hi,
I am your instruction manual.

Maranza 3.6*3.5*2.3M

Assembly instruction

Nice to meet you

montage instructies
montageanleitung
instructions de montage
instrucciones de montaje

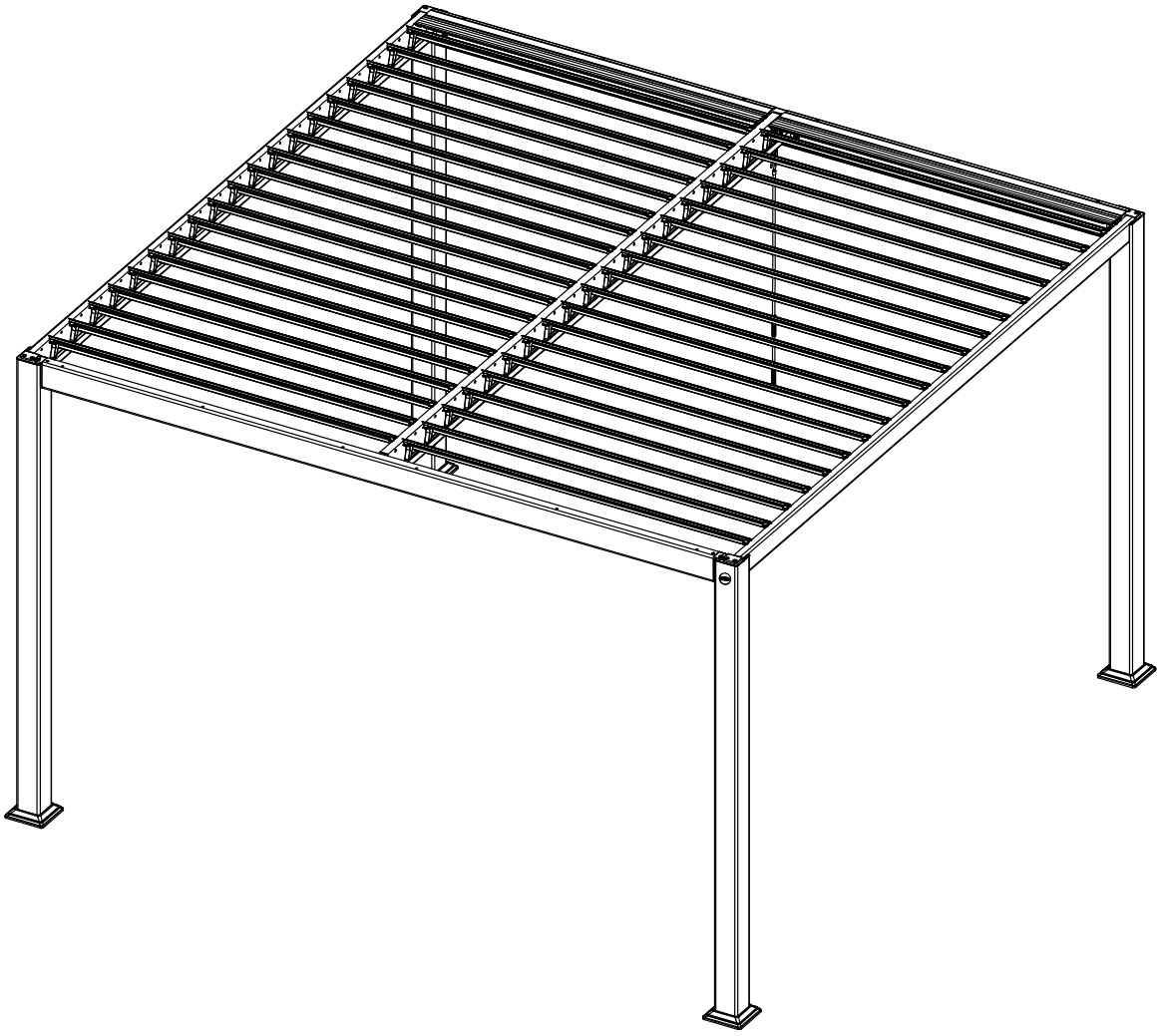

SUNS Sharing the sun together

hello-suns.com

Maranza 3.6*3.5*2.3M

Assembly instruction

Nice to meet you

montage instructies
montageanleitung
instructions de montage
instrucciones de montaje

REF	PCE	PIECE	QTY	DIM
	A1	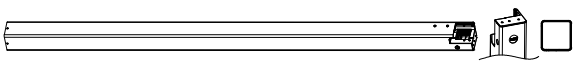	2	
	A2		2	
	B		2	
	C1		1	
	C2		1	
	D		1	
	F		76	
	G		2	
	H	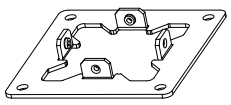	4	
	J	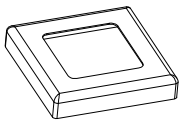	4	
	L		2	

SUNS Sharing the sun together

hello-suns.com

Nice to meet you

montage instructies
montageanleitung
instructions de montage
instrucciones de montaje

REF	PCE	PIECE	QTY	DIM
	R		1	
	S1	M6*15	22+2	
	S2	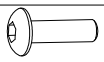 M8*20	36+2	
	S3	M4*18	2	
	S4	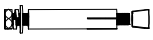	8+1	
	T1		2	
	T2	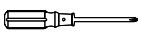	1	
	T3		1	
		Silicone neutral glass glue, purchased by customers		

Nice to meet you

montage instructies
montageanleitung
instructions de montage
instructiones de montaje

STEP 01

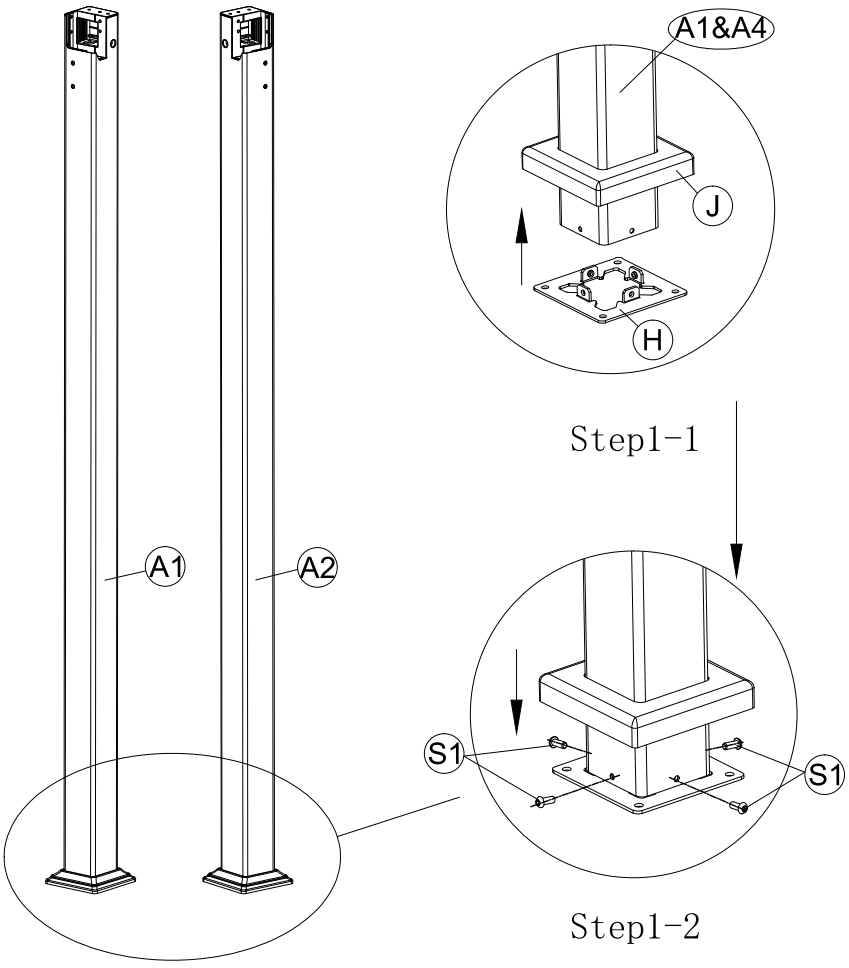

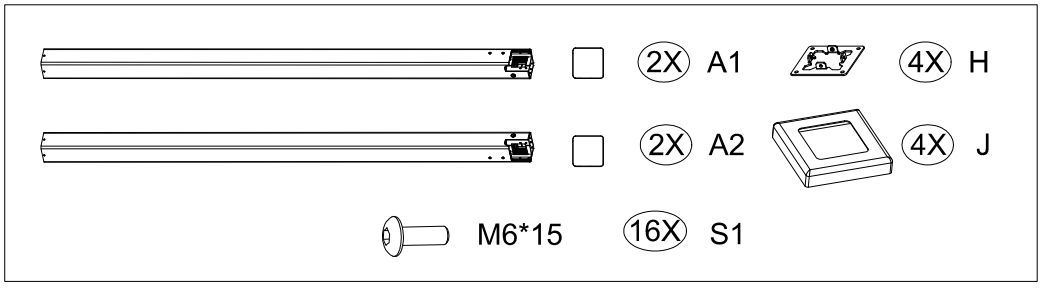

SUNS Sharing the sun together

hello-suns.com

Nice to meet you

montage instructies
montageanleitung
instructions de montage
instrucciones de montaje

STEP 02

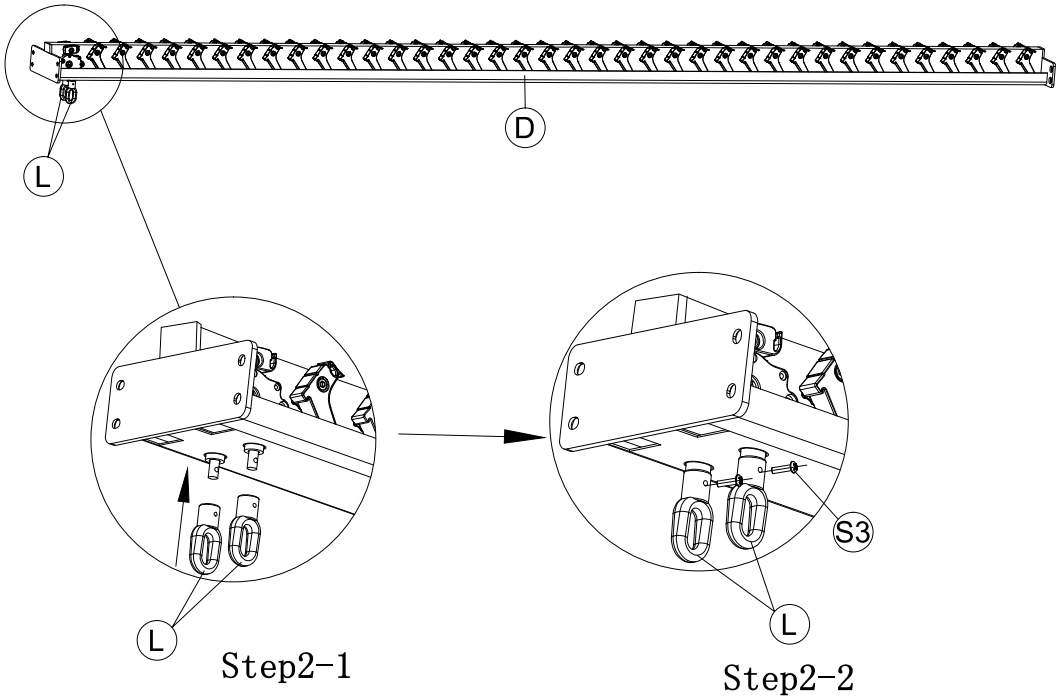

Step2-1 Step2-2

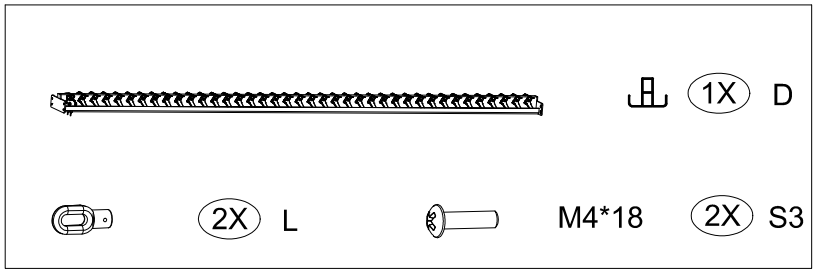

SUNS Sharing the sun together

hello-suns.com

Nice to meet you

montage instructies
montageanleitung
instructions de montage
instructions de montaje

STEP 03

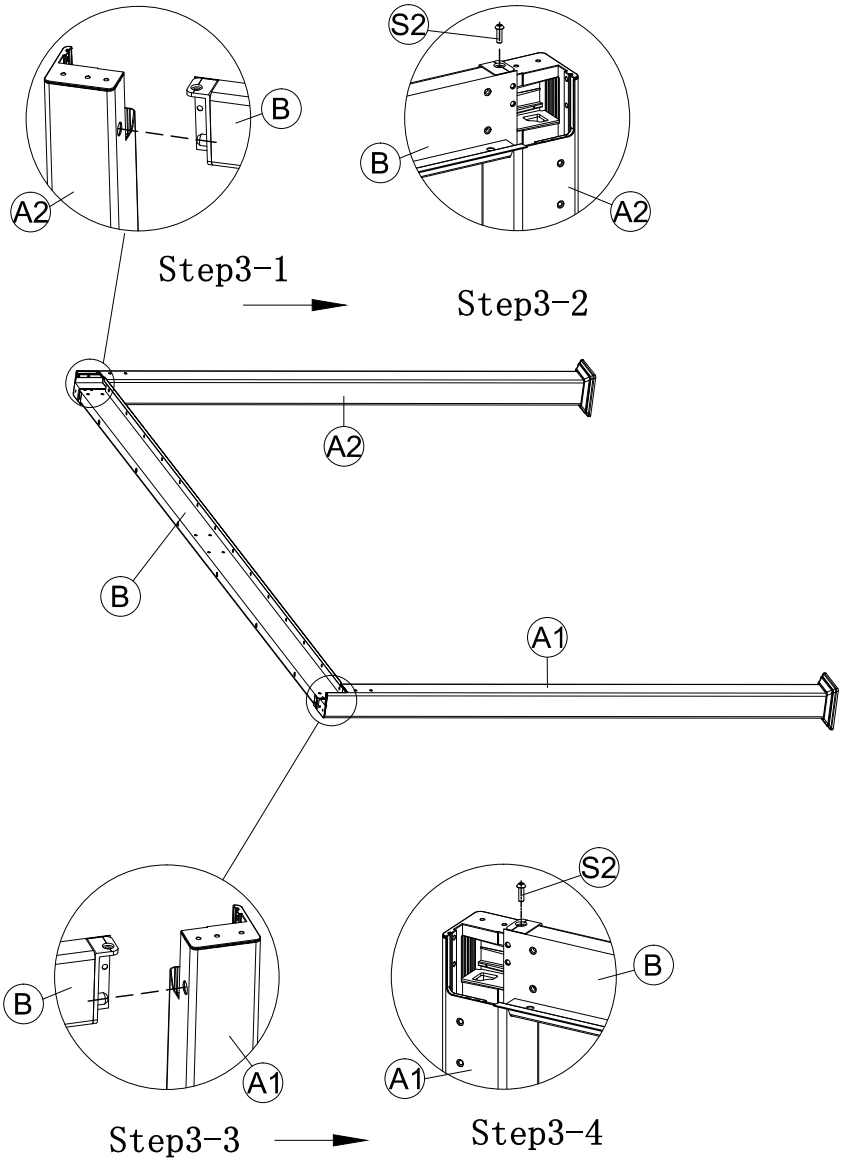

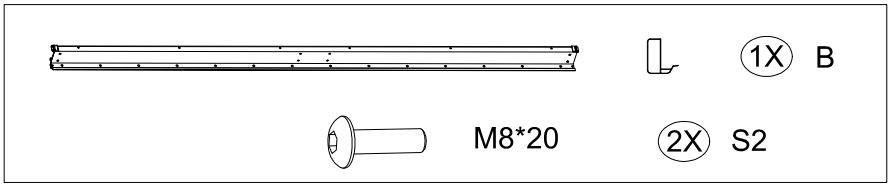

SUNS Sharing the sun together

hello-suns.com

Nice to meet you

montage instructies
montageanleitung
instructions de montage
instrucciones de montaje

STEP 04

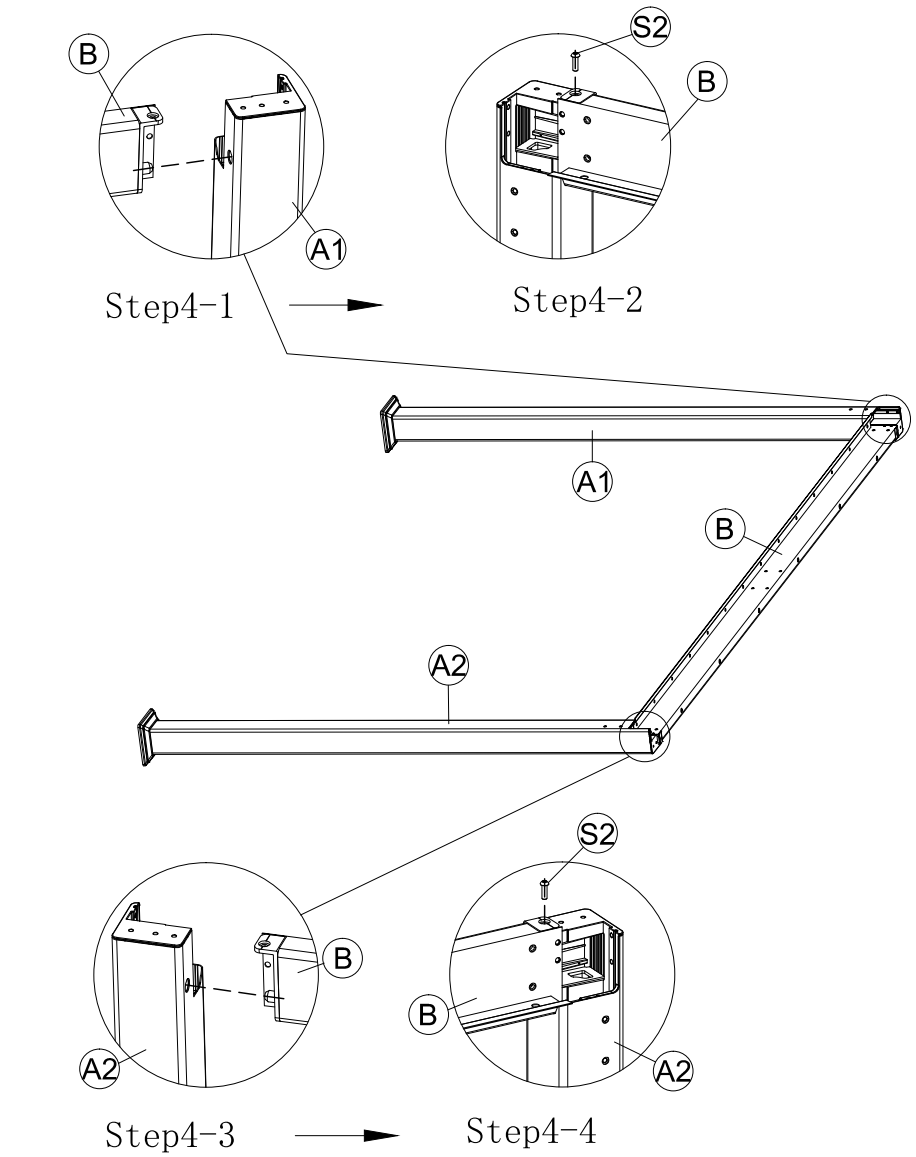

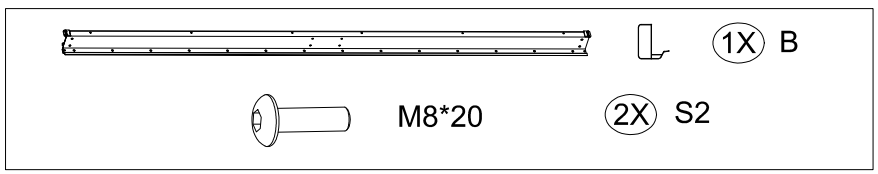

SUNS Sharing the sun together

hello-suns.com

Nice to meet you

montage instructies
montageanleitung
instructions de montage
instructions de montaje

STEP 05

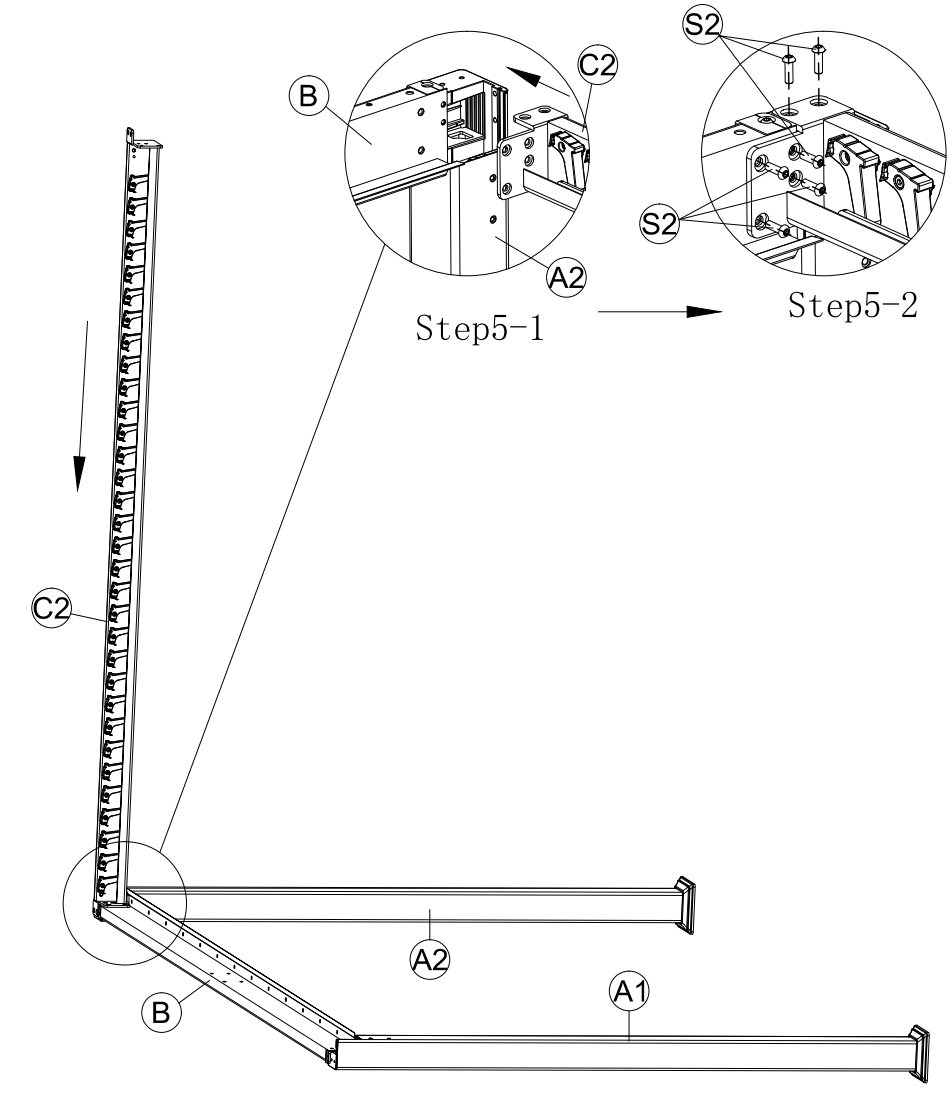

SUNS Sharing the sun together

hello-suns.com

Nice to meet you

montage instructies
montageanleitung
instructions de montage
instructions de montaje

STEP 06

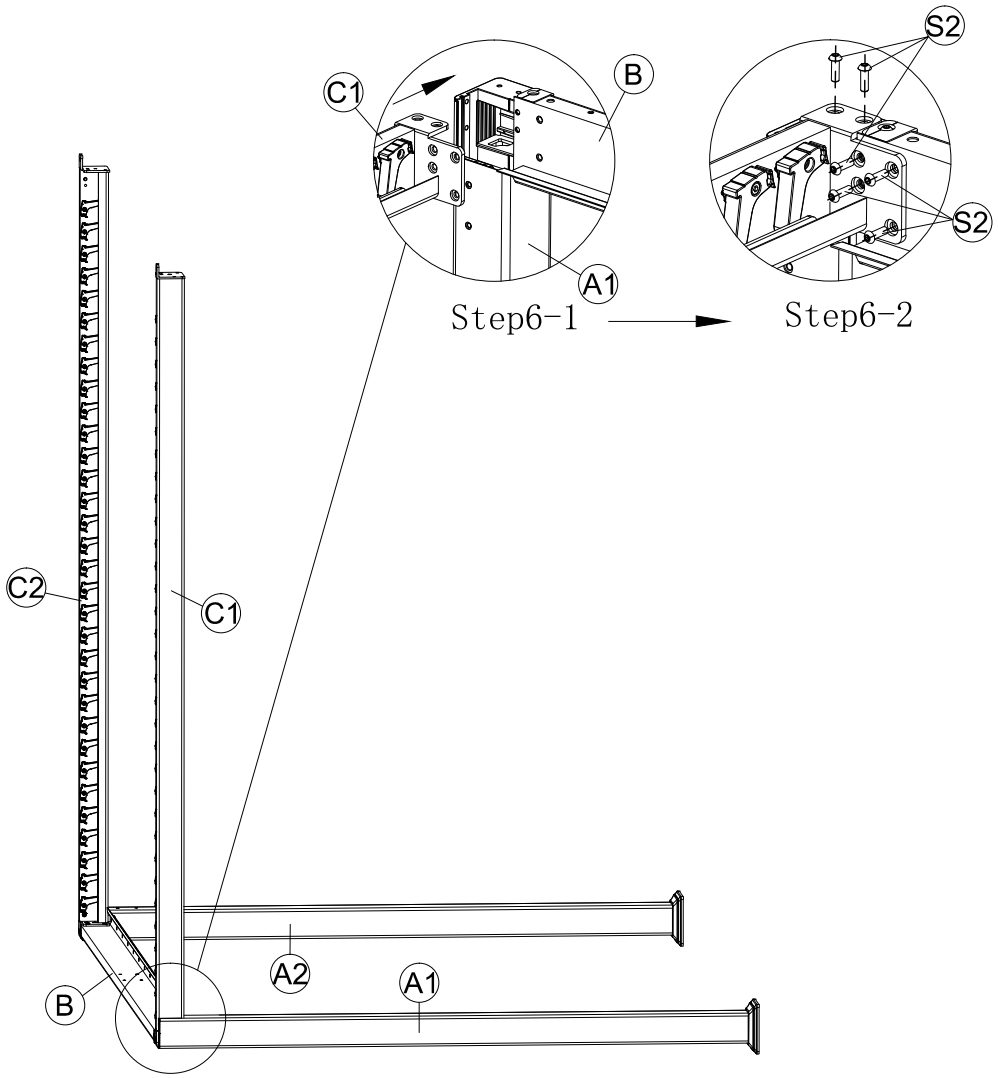

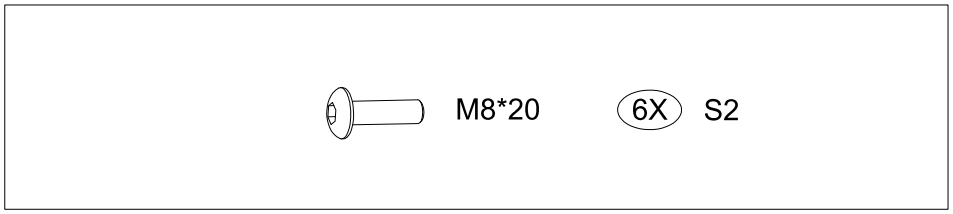

Nice to meet you

montage instructies
montageanleitung
instructions de montage
instrucciones de montaje

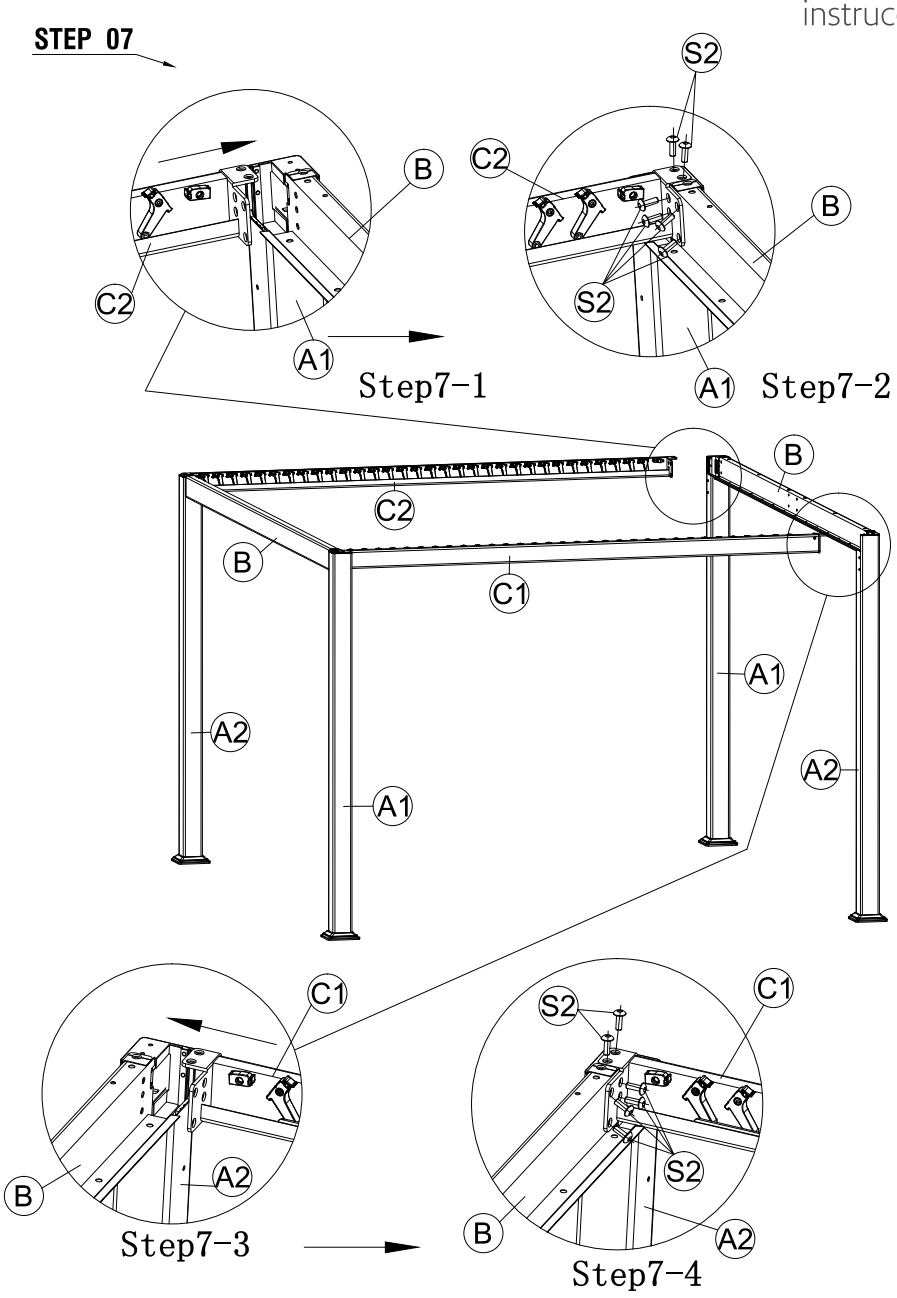

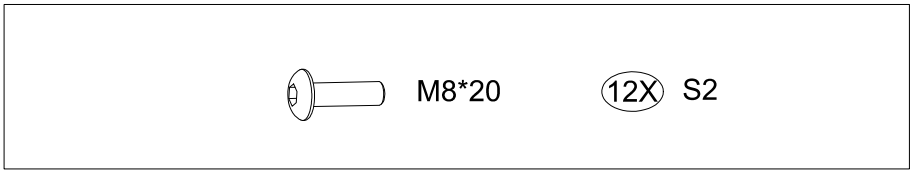

SUNS Sharing the sun together

hello-suns.com

Nice to meet you

montage instructies
montageanleitung
instructions de montage
instructions de montaje

STEP 08

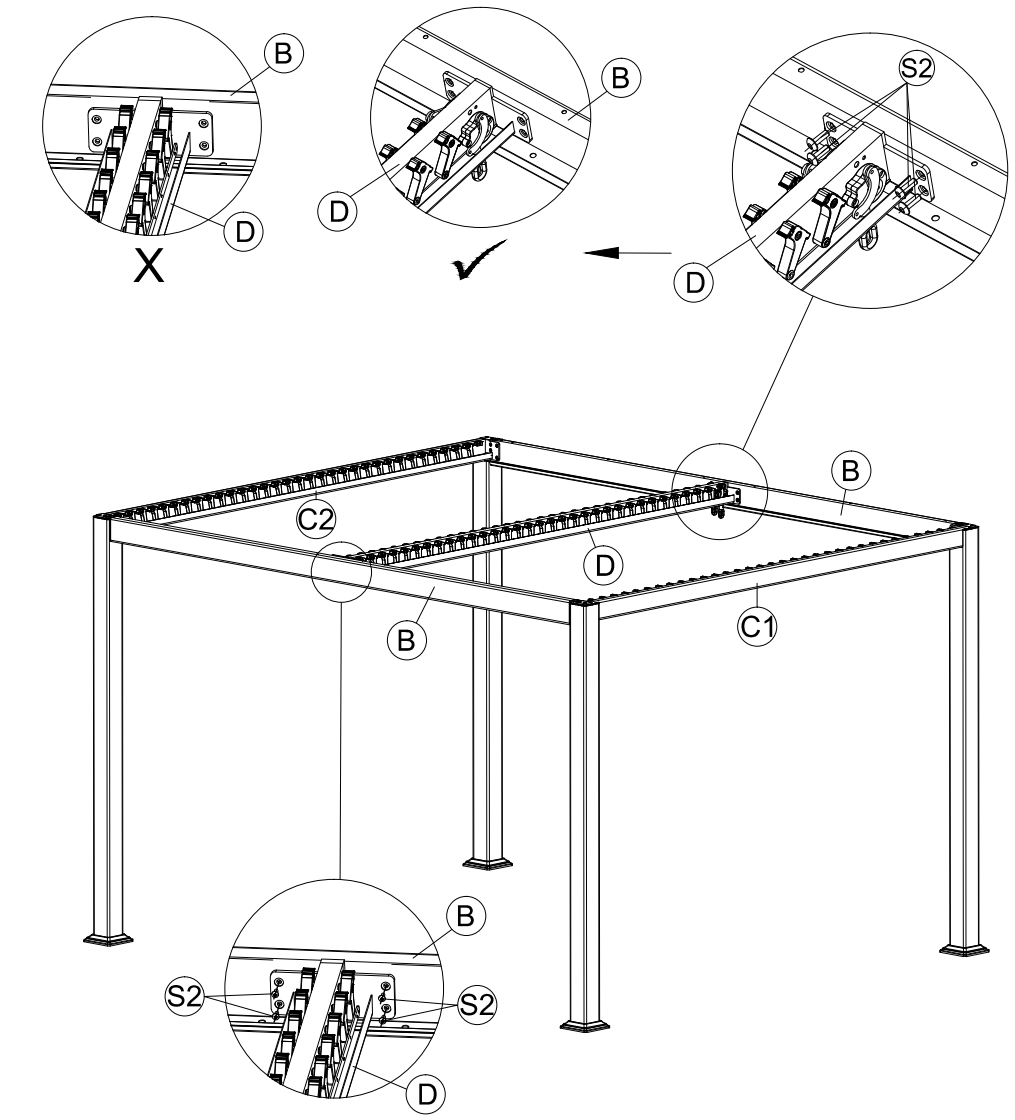

SUNS Sharing the sun together

hello-suns.com

Nice to meet you

montage instructies
montageanleitung
instructions de montage
instructions de montaje

STEP 09

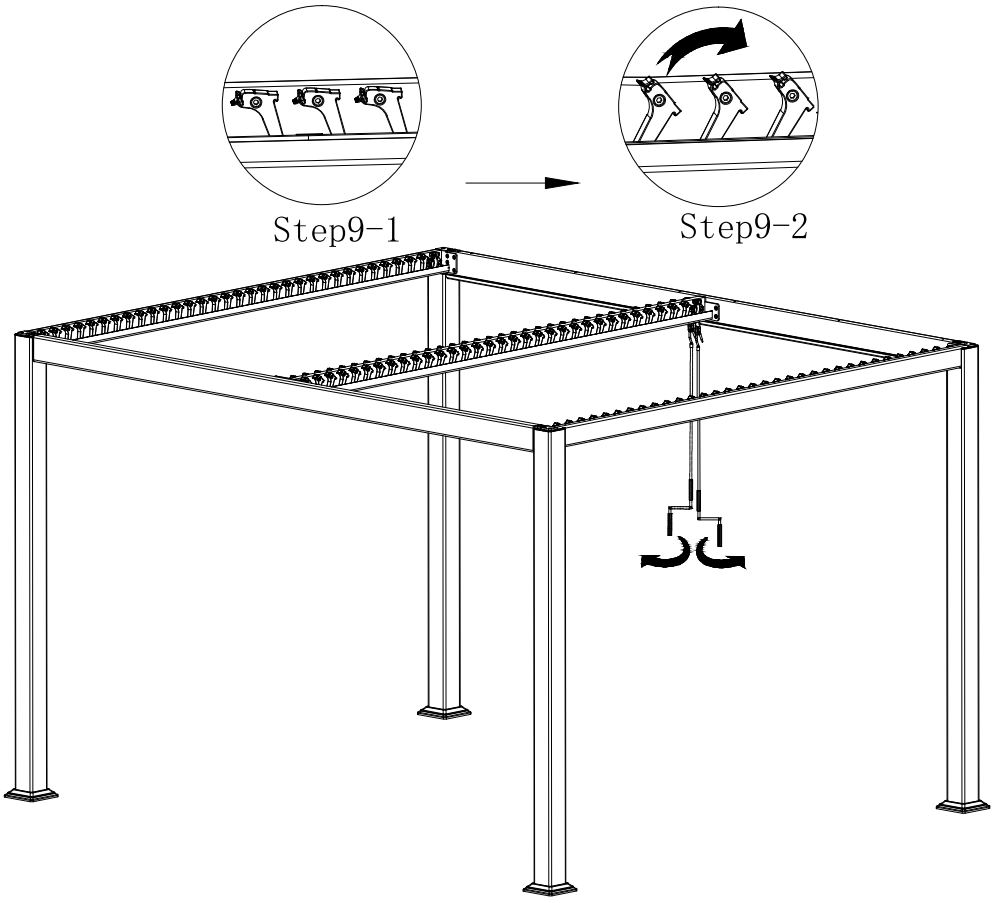

Turn the position from picture 1 to picture 2 first, then assemble the shutter.

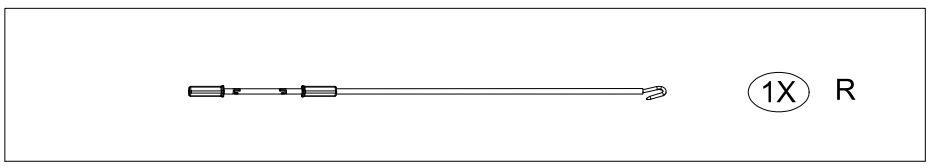

11

Nice to meet you

montage instructies
montageanleitung
instructions de montage
instructiones de montaje

STEP 10

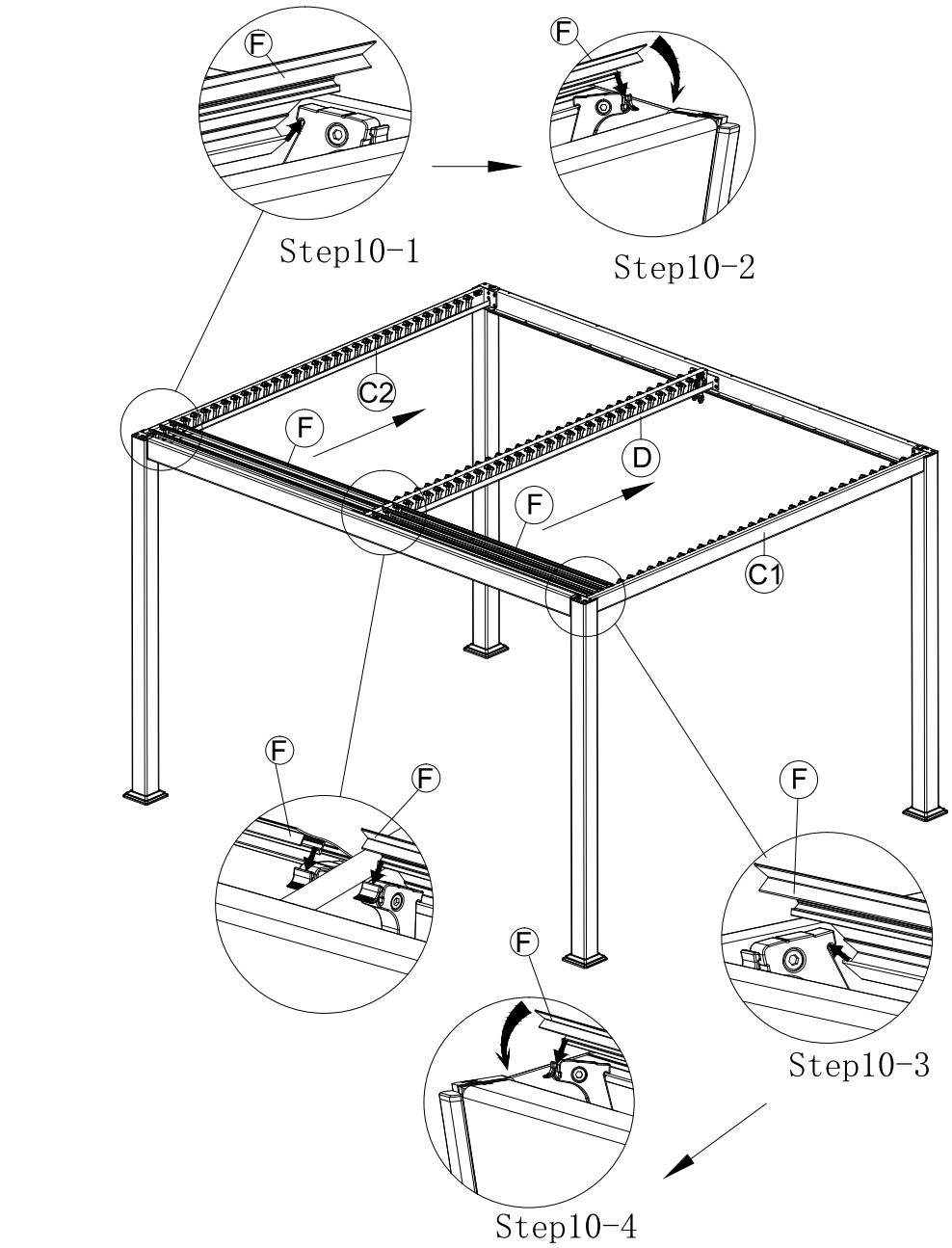

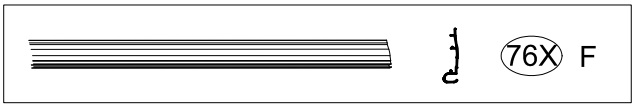

SUNS Sharing the sun together

hello-suns.com

Nice to meet you

montage instructies
montageanleitung
instructions de montage
instrucciones de montaje

STEP 11

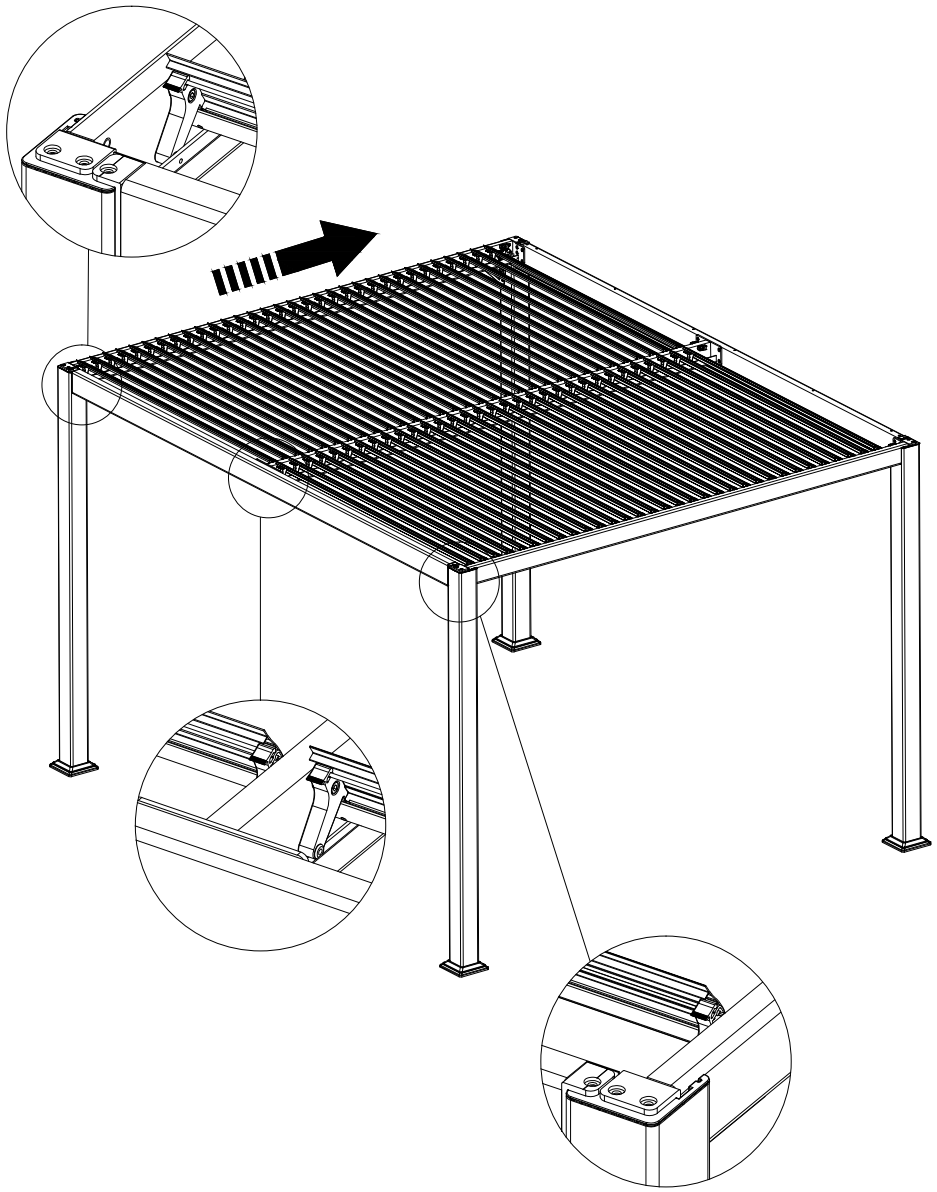

SUNS Sharing the sun together

hello-suns.com

Nice to meet you

montage instructies
montageanleitung
instructions de montage
instructions de montaje

STEP 12

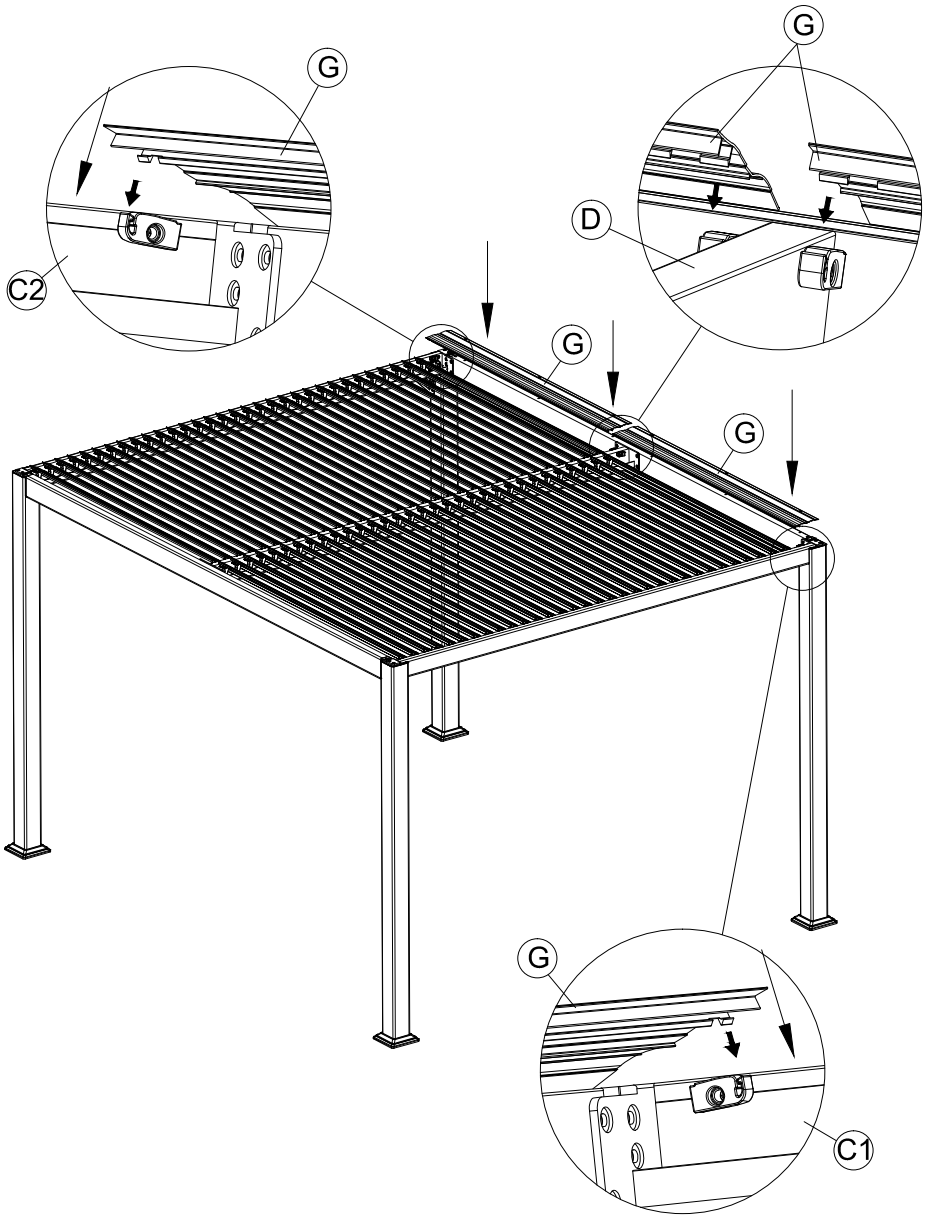

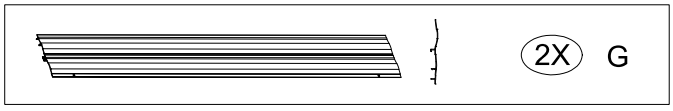

SUNS Sharing the sun together

hello-suns.com

Nice to meet you

montage instructies
montageanleitung
instructions de montage
instructions de montaje

STEP 13

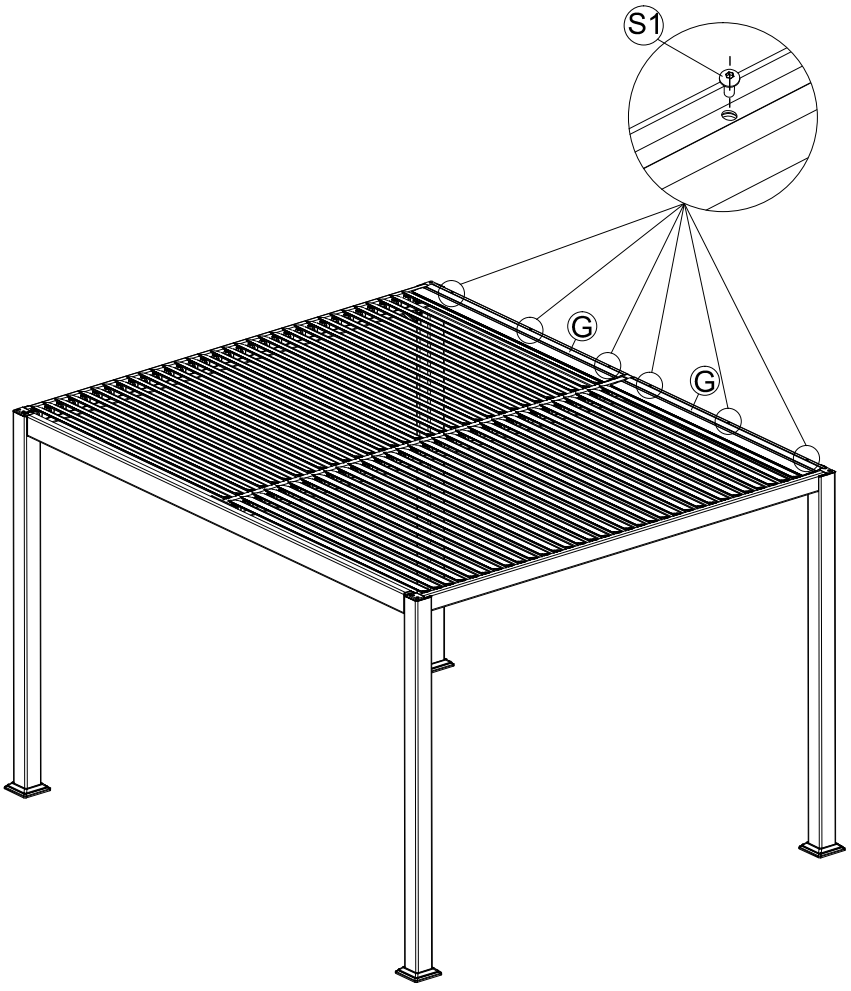

M6*15	6X S1

SUNS Sharing the sun together

hello-suns.com

Nice to meet you

montage instructies
montageanleitung
instructions de montage
instrucciones de montaje

STEP 14

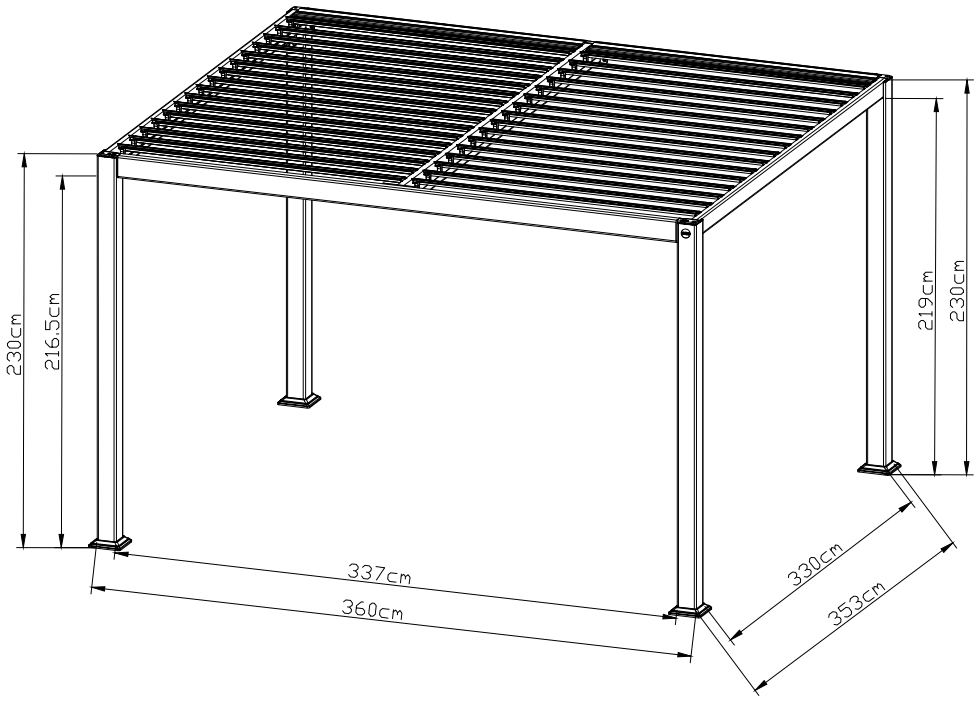

SUNS Sharing the sun together

hello-suns.com

Nice to meet you

montage instructies
montageanleitung
instructions de montage
instrucciones de montaje

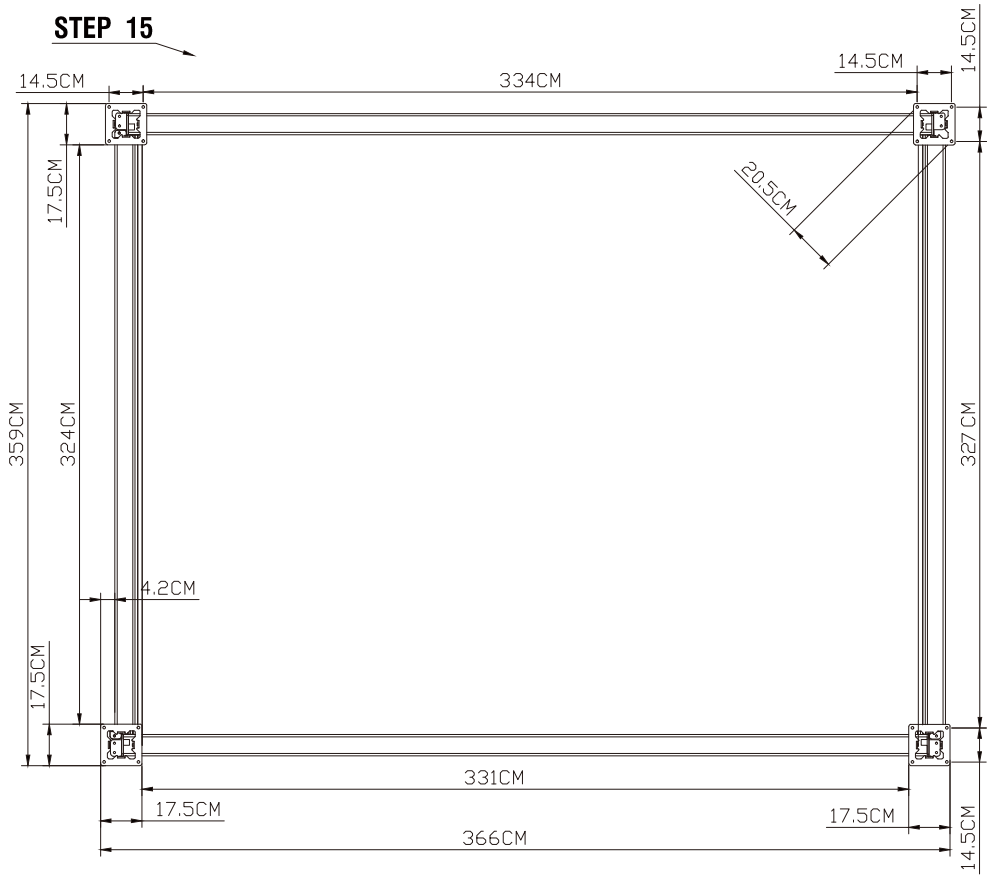

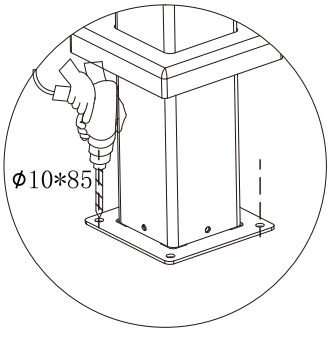

Nice to meet you

montage instructies
montageanleitung
instructions de montage
instrucciones de montaje

STEP 16

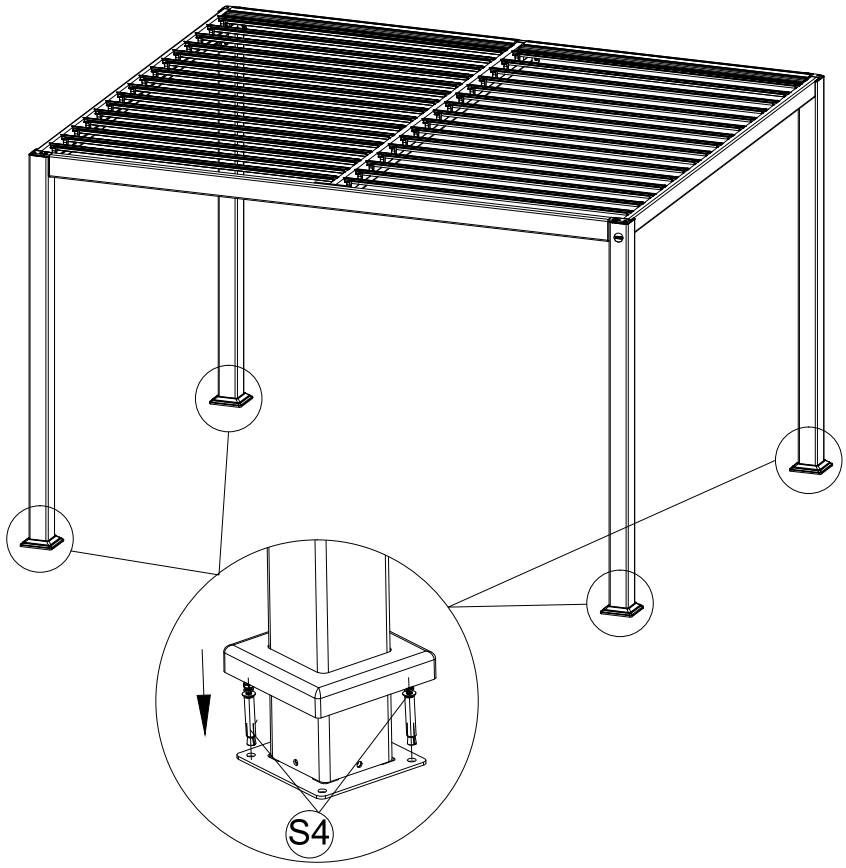

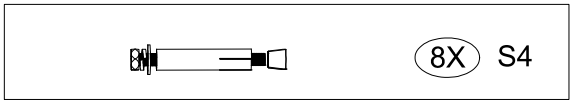

SUNS Sharing the sun together

hello-suns.com